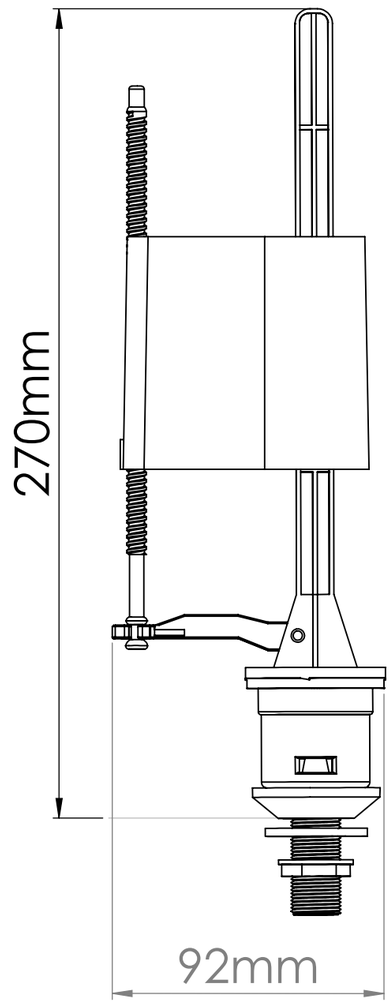
270mm
92mm

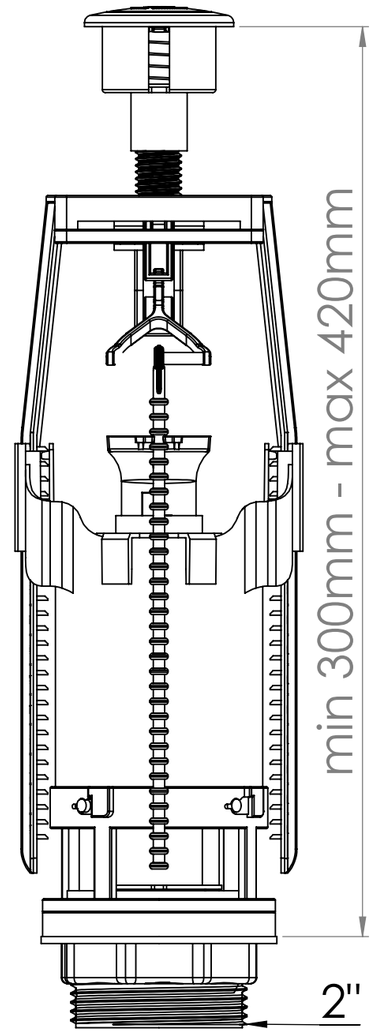
min 300mm - max 420mm
2''