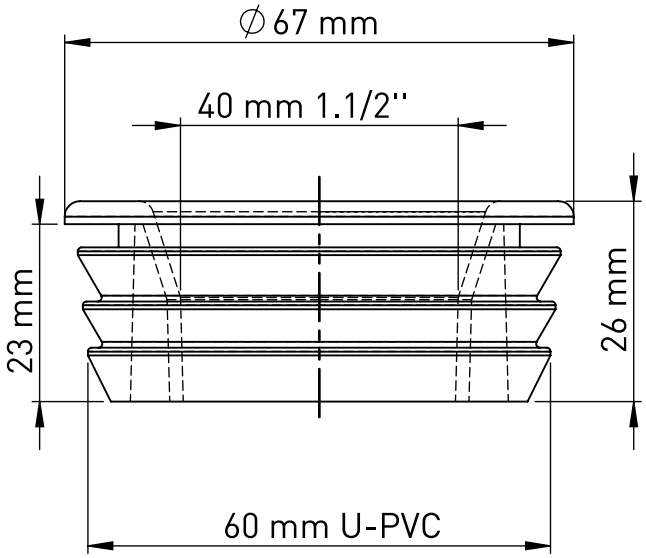
∅ 67 mm
40 mm 1.1/2''
23 mm
26 mm
60 mm U-PVC